TORMAX® AUTOMATIC

iMOTION® TN 110 IN-FLOOR OPERATOR WITH SURFACE MOUNTED FLOOR BOX

JOB NAME: _____ DATE: _____

DOOR LOCATION: _____ DOOR NO: _____ SHEET ___ OF ___

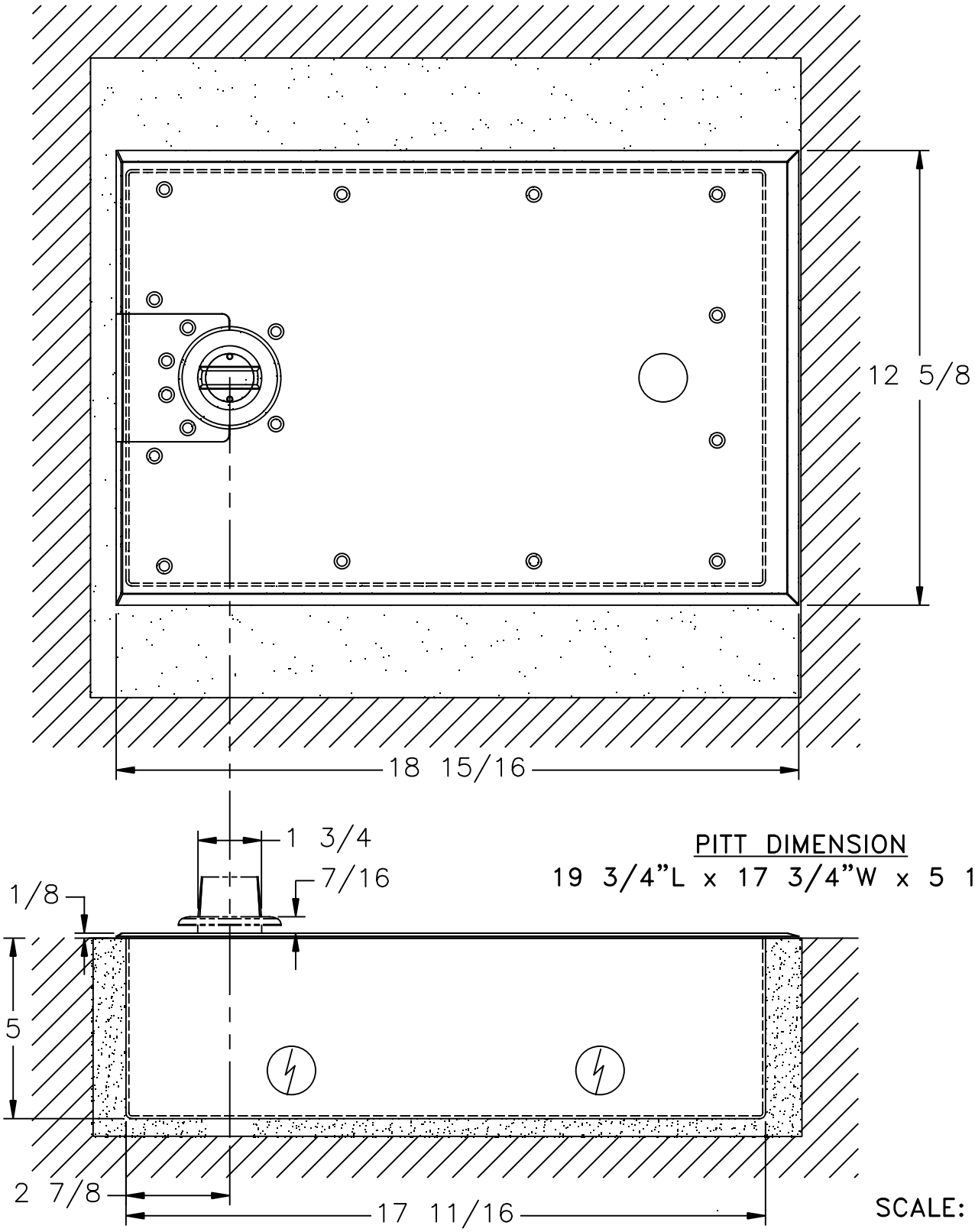

PITT DIMENSION

19 3/4"L x 17 3/4"W x 5 1/2"D

SCALE: 1:1