TORMAX® AUTOMATIC

TX9200SM AUTOMATIC SLIDING DOOR SYSTEM

SINGLE RH SURFACE MOUNT REVERSE BREAKOUT OUTSIDE SLIDE "P" PANEL APPLICATION (SX-P)

JOB NAME: _____ DATE: _____

DOOR LOCATION: _____ DOOR NO: _____ SHEET ___ OF ___

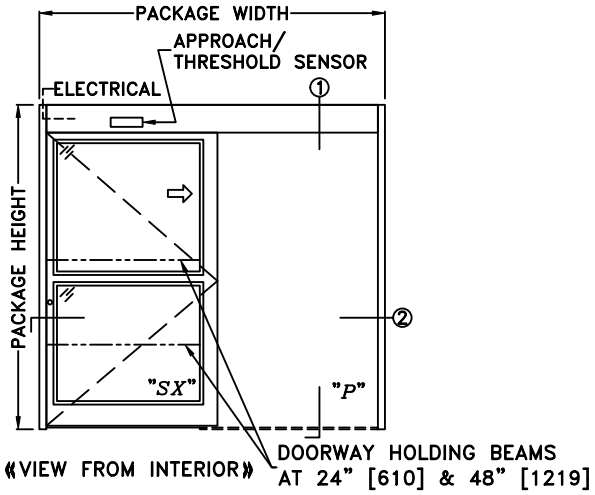

ELEVATION

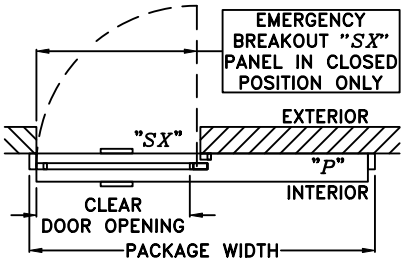

PLAN

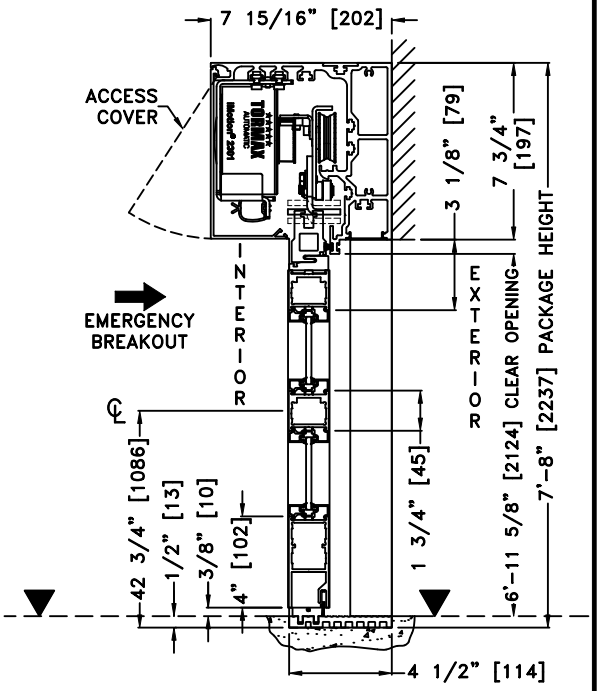

① VERTICAL SECTION

▼= FINISHED FLOOR

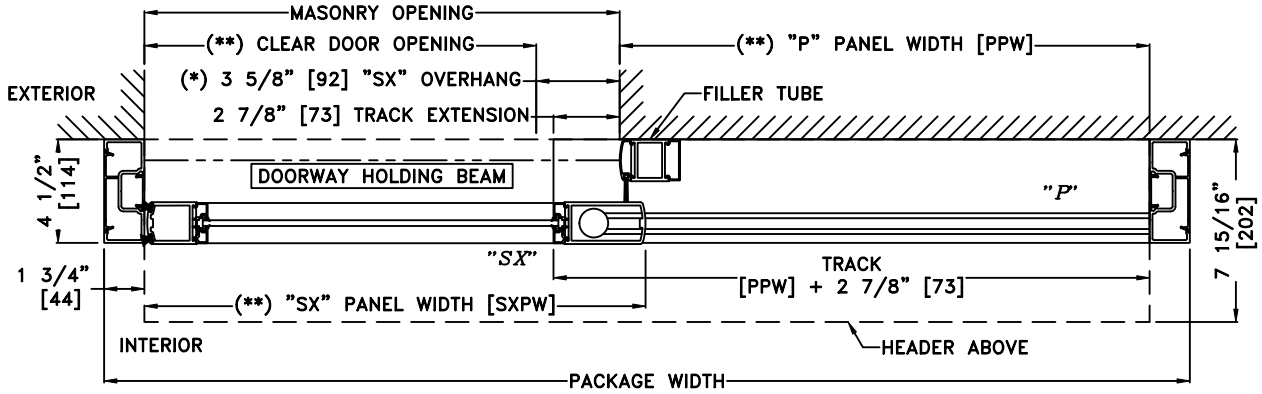

② HORIZONTAL SECTION

*SEE APPENDIX FOR DETAILS OF TX9200 HEAVY DUTY DRIVE SYSTEM & THRESHOLD OPTIONS

SAMPLE PACKAGE WIDTH INFORMATION			
PACKAGE WIDTH [UW] (*)	CLEAR DOOR OPENING [CDO] (*)	PANEL WIDTH [PW] (*)	EMERGENCY BREAKOUT WIDTH (*)
2*[CDO] + 11 3/4	[UW]/2 − 5 7/8 −OR− [PW] − 4 5/8	[UW]/2 − 1 1/4	[UW] − [PW] − 5 1/2
7'-0" [2134]	36 1/8" [918]	40 3/4" [1035]	37 3/4" [959]
8'-0" [2438]	42 1/8" [1070]	46 3/4" [1187]	43 3/4" [1111]
9'-0" [2743]	48 1/8" [1222]	52 3/4" [1340]	49 3/4" [1264]

(*) CALCULATIONS BASED ON EQUAL PANELS, 2 1/8" NARROW STILES, & 1/4" GLASS
(**) TO OPEN SX PANEL FLUSH WITH EDGE OF MO, USE THE FOLLOWING FORMULAS:
[SXPW] = [MO] + 1 | [PPW] = [MO] + 3 1/4 | [UW] = 2*[MO] + 6 3/4

NOTES:
1. DETAILS NOT TO SCALE
2. ELECTRICAL REQUIREMENTS: 120 VAC, 5 AMPS MIN. TO OPERATOR BY ELECTRICAL CONTRACTOR
3. DOOR PACKAGES ARE INDIVIDUALLY ENGINEERED TO FIT YOUR JOB REQUIREMENTS